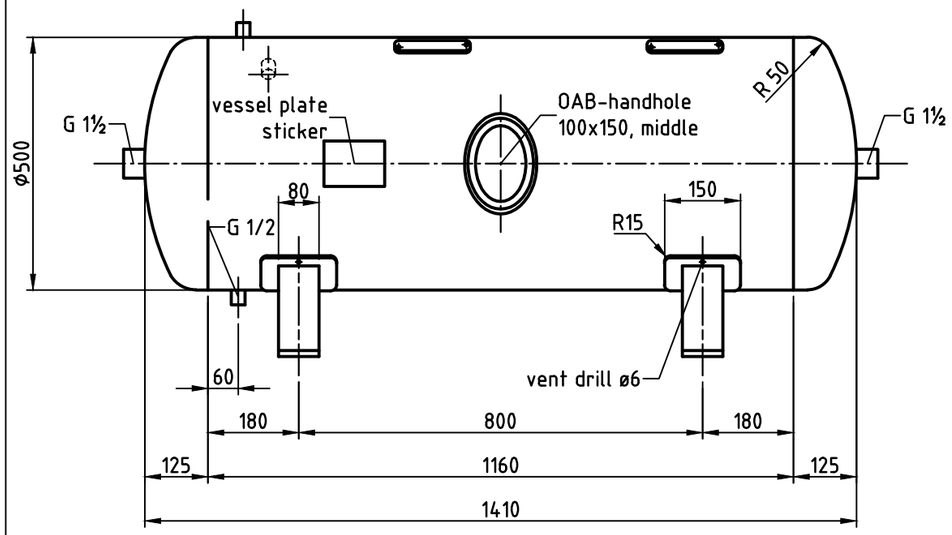

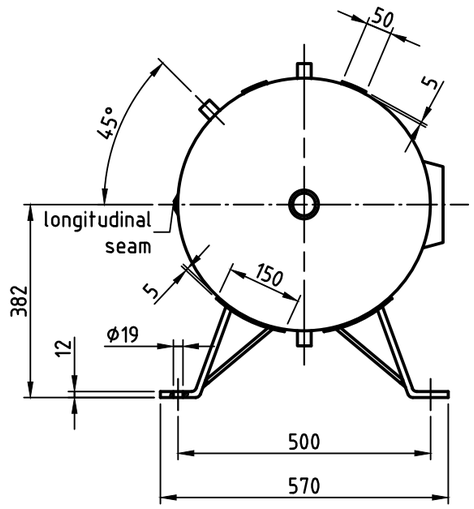

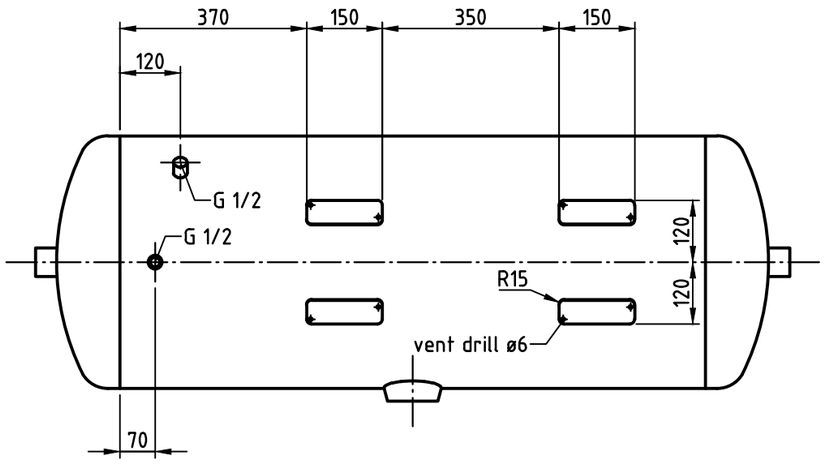

socket welding

drain and plug socket
inside flush

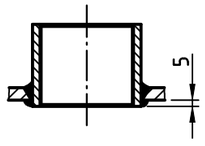

OAB 51 - handhole lock 100/150
tested components

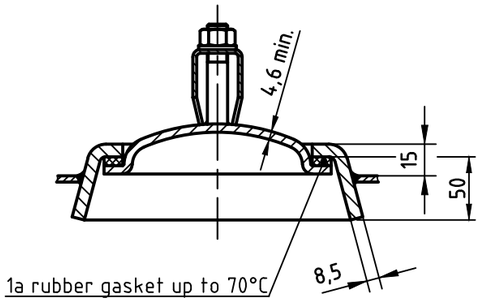

seams (unless otherwise indicated on drawing):

longitudinal seam

socket-/flangeweldings

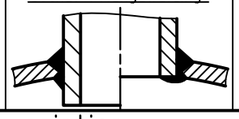

circumferential seams

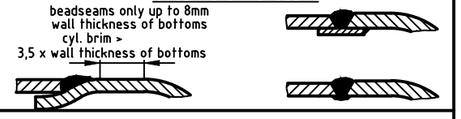

pressure variation :

pressure swing 0-16 bar max. operations 1.000

infinite operation of pressure swing within 20% of 16 bar

operational characteristics / calculation characteristics :

volume V (litre)	:	250
max. working pressure PS (bar)	:	16
test pressure PT (bar)	:	22,88
min. working temp. TS (°C)	:	-20
max. working temp TS (°C)	:	50
fluid	:	compressed air / nitrogen (fluid group 2)
location	:	inside and outside building possible

coating :

inside :	raw	or:	inside :	hot dip galvanized
outside :	primed (if costumer wishes lacquered)		outside :	hot dip galvanized

manufacturing and testing

acc. to PED 2014 / 68 / EU - AD 2000

conformity benchmark :

fluid group	: 2	categorie	: IV
diagram	: 2	module	: H1

scale:	1:12.5
our no.:	-
order no.:	-
used for:	M+B Standardvessel
weight:	ca.120 kg
sheet:	1
of sheet:	1
date of plot:	24.06.2015
file:	ENG-010823

	date	name
compl.	24.06.2015	CW
appr.	24.06.2015	SW

follow protection mark acc. DIN 34

description:

pressure vessel horizontal
250 l 16 bar

drawing no.:
MB 030602-2.250/E

revision: A

date of revision: 24.06.2015

drawing no. of design inspection:
MB 030602-2

revision only on CAD